Instruction manual — Standard elongated toilet seat (top-fix hinges)

Product name	Standard elongated toilet seat (top-fix hinges)	**Model no.**	ELG-000 (generic)
Manual version	1.0	**Date**	2026-11-25

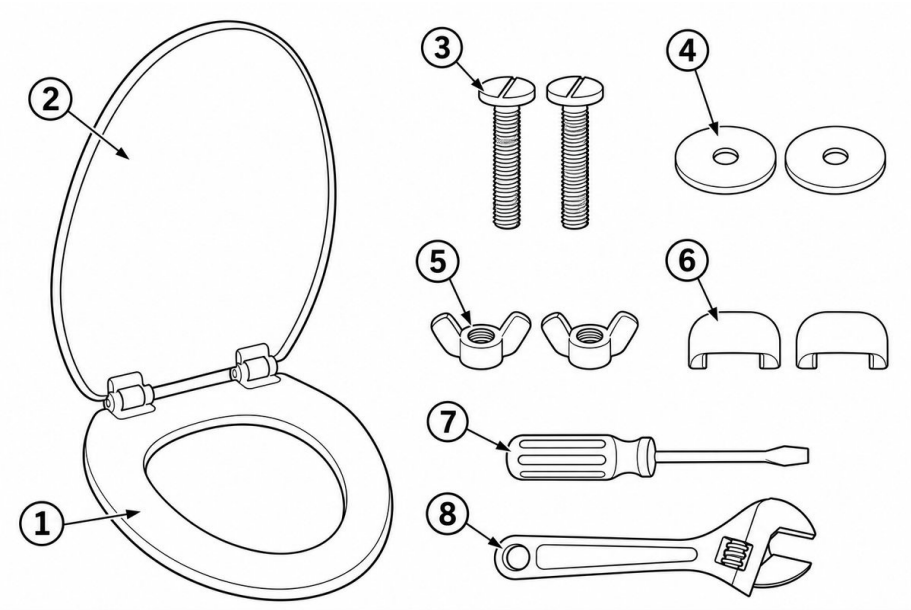

Figure 0 — Included parts (1–6) and tools needed (7–8, not included)

Safety information

Read all warnings before starting installation. Step-specific cautions are repeated before the steps they apply to.

- **WARNING —** Do not over-tighten the mounting nuts or use a wrench on the new wing nuts. Excessive tightening force can crack the ceramic toilet bowl.
- **CAUTION —** Confirm the toilet rim and mounting holes are clean and completely dry before installing the new hinges so the rubber washers seat flat and do not slip.
- **CAUTION —** Keep small hardware (bolts, washers, wing nuts, and hinge caps) out of reach of children, and do not stand on the closed lid.

What's in the box

Check all parts against Figure 0 before discarding the packaging. Tools (callouts 7–8) are not included.

Ref	Part	Qty	Figure
1–2	Seat and lid (pre-assembled)	1	Figure 0 — callouts 1 (seat), 2 (lid)
3	Hinge bolt	2	Figure 0 — callout 3
4	Rubber washer	2	Figure 0 — callout 4
5	Wing nut	2	Figure 0 — callout 5
6	Hinge cap	2	Figure 0 — callout 6

Tools you need

- **Flat screwdriver (Figure 0, callout 7) —** For prying open old hinge caps and holding slotted bolt heads if needed.
- **Adjustable wrench (Figure 0, callout 8) —** For removing old seat nuts only. Do not use a wrench on the new wing nuts.
- **Clean soft cloth and mild soap —** For wiping and drying the ceramic mounting area before installation.

Installation / assembly steps

Step	Action	Note / caution
1	Pry open the old hinge caps with a flat screwdriver, unscrew the old nuts beneath the bowl with an adjustable wrench, and lift off the old seat.	**Note:** Hold the top bolt head with the screwdriver if it spins while loosening the nut underneath.

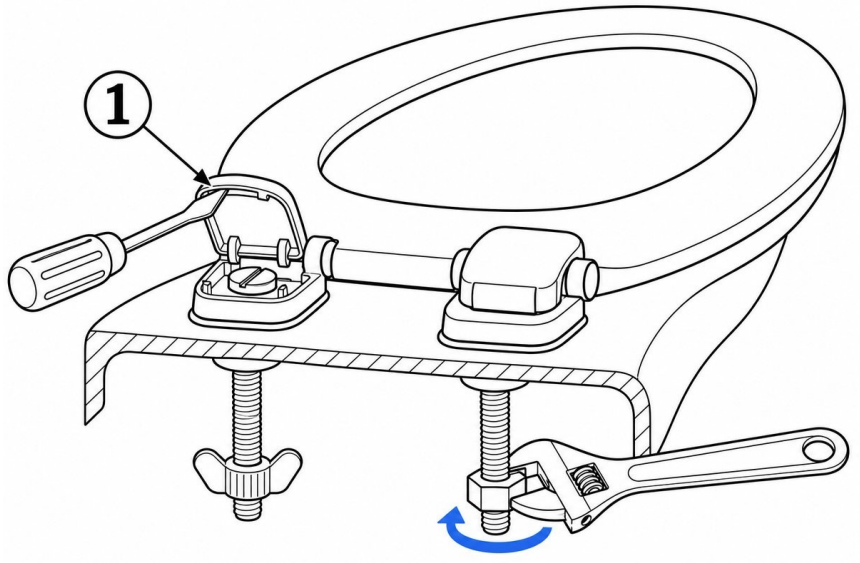

Figure 1 — Prying open the old hinge cap and loosening the mounting nut beneath the bowl

Step	Action	Note / caution
2	Wipe around both empty mounting holes and the rear ceramic ledge with mild soap and a damp cloth, then dry completely.	**Caution:** Make sure the ceramic surface is dry and free of residue so the new rubber washers seat evenly.



Figure 2 — Cleaning and drying the rear rim and mounting holes

Step	Action	Note / caution
3	Open the hinge caps on the new seat, place one rubber washer beneath each hinge base, and insert both hinge bolts from above through the hinges, washers, and ceramic holes.	**Note:** Check that each rubber washer sits flat between the hinge base and ceramic with both bolt heads fully seated.

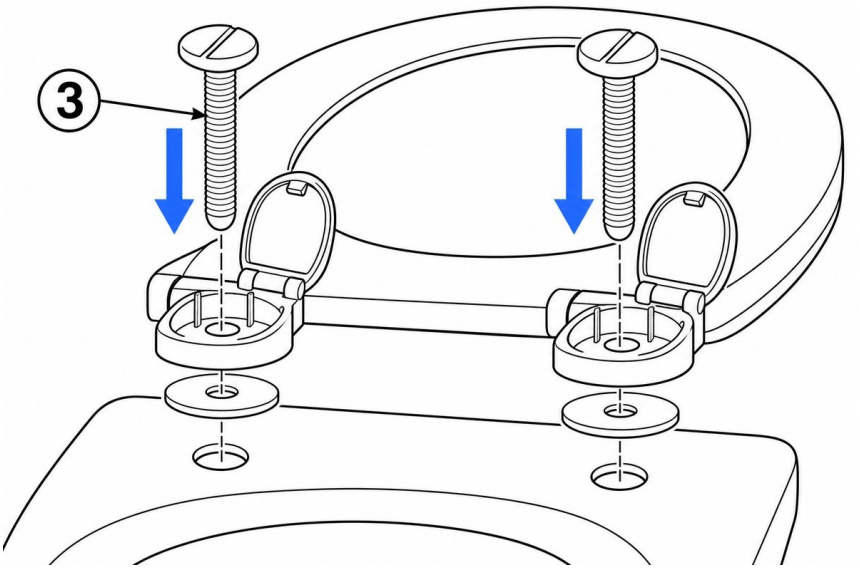

Figure 3 — Inserting hinge bolts from above through the hinge bases, rubber washers, and ceramic holes

Step	Action	Note / caution
4	Reach underneath the rear of the bowl and thread both wing nuts onto the hinge bolts by hand until they just contact the underside of the ceramic.	**Caution:** Leave the wing nuts slightly loose for now so the seat can be adjusted in Step 5.

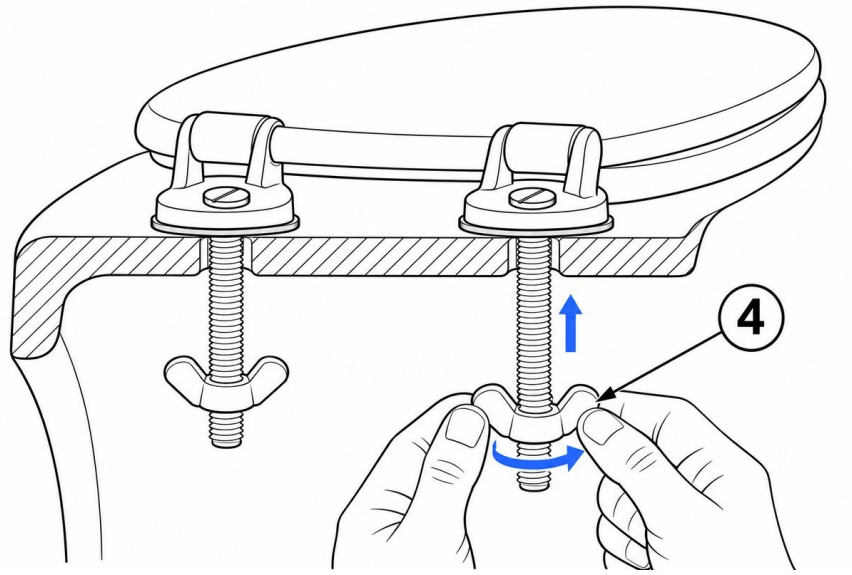

Figure 4 — Threading both wing nuts onto the bolts by hand from beneath the bowl

Step	Action	Note / caution
5	Lower the seat onto the bowl, align the front edge of the seat flush with the front rim, and center the seat evenly from left to right.	**Note:** Verify equal overhang along both sides and a flush front contour before final tightening.

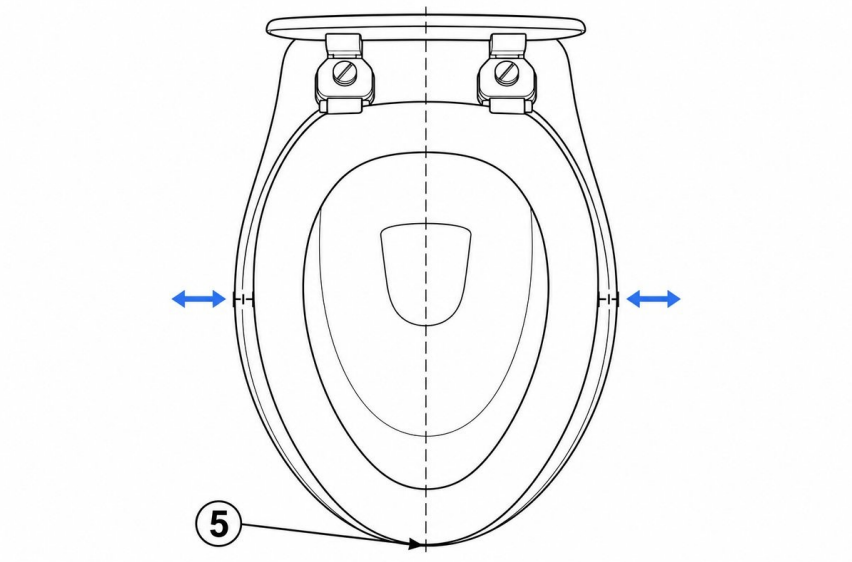

Figure 5 — Aligning the front edge and centering the seat evenly left to right

Step	Action	Note / caution
6	Hold the seat steady, tighten both wing nuts by hand until snug plus about 1/4 turn, then press both hinge caps down until they click shut.	**Warning:** Hand-tighten only. Using a wrench on the wing nuts can over-stress and crack the ceramic bowl.

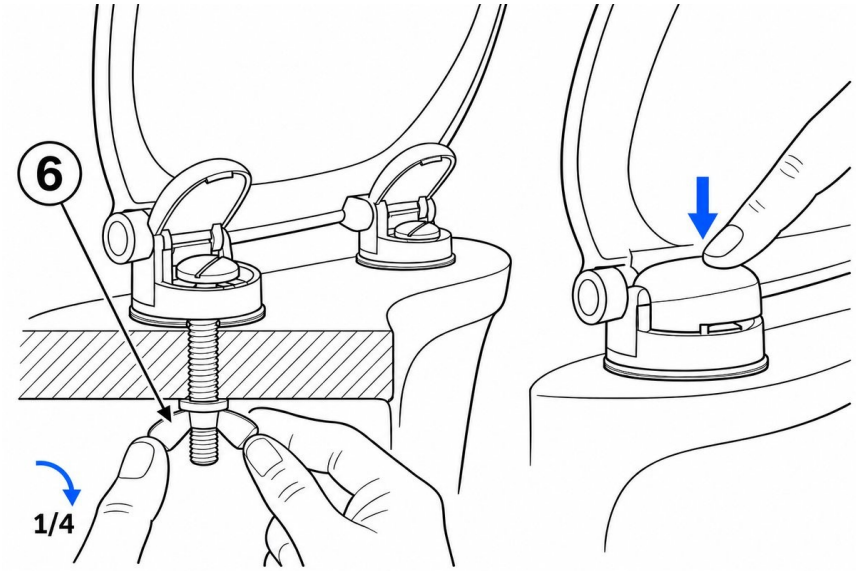

Figure 6 — Hand-tightening each wing nut 1/4 turn past snug and snapping the hinge caps closed

Check before use

□ Seat sits centered and flush on the ceramic rim with no side-to-side play when nudged.

□ Lid and seat lift and close smoothly without rubbing the tank.

□ Wing nuts are snugged by hand only (never wrench-tightened) and no stress marks or cracks appear near the mounting holes.

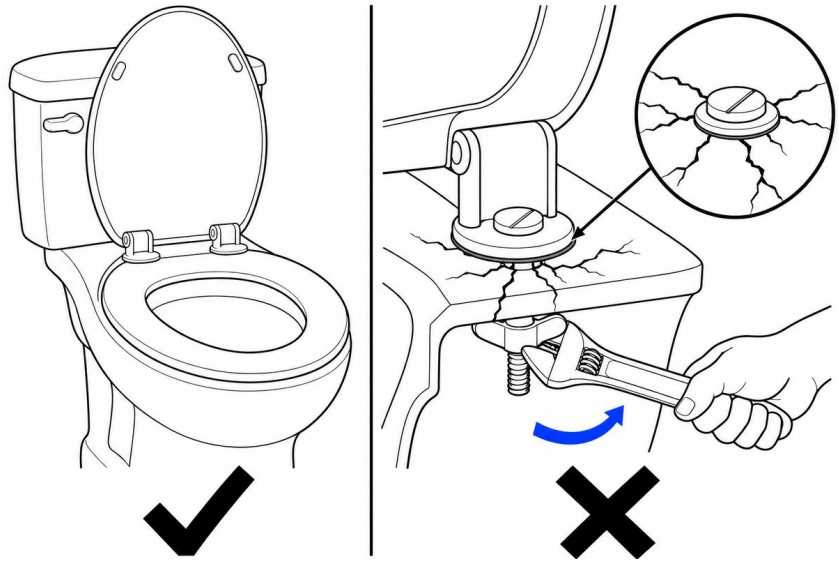

Figure 7 — Correct (✓): seat centered and flush on the rim. Incorrect (✗): over-tightening with a wrench can crack the ceramic.

Care and cleaning

- **Daily cleaning:** Wipe the seat, lid, and hinges with a soft cloth dampened with warm water and mild soap, then dry with a clean towel.
- **Avoid harsh cleaners:** Do not use bleach, strong acidic cleaners, scouring powders, or abrasive pads, which can dull the finish or degrade the rubber washers.
- **Periodic check:** Check wing-nut tightness by hand every 6 months and re-snug gently if the seat begins to shift.

Troubleshooting

Problem	Possible cause	What to do
Seat shifts from side to side	Wing nuts have loosened	Re-center the seat on the rim and tighten each wing nut by hand an additional 1/4 turn.
Seat sits crooked or off-center on the rim	Seat moved during final tightening	Loosen both wing nuts slightly, re-center the seat evenly left to right and flush at the front, then hand-tighten again.
Hinge caps will not snap shut	Hinge bolts are not seated fully into the hinge base	Check that both bolt heads sit flat in the hinge recesses and clear any debris before pressing the caps down.

Warranty and support

Covered by a 1-year limited warranty against defects in materials and workmanship under normal household use. Damage caused by over-tightening, abrasive chemicals, or improper installation is not covered.

Support email: support@example.com | **Phone:** +1 (555) 010-0000

Revision history

Rev	Date	Change	By
1.0	2026-11-25	Initial release	Product Documentation

This document is a layout example showing how an illustrated instruction manual is structured. It is not a validated installation procedure for any specific product.

Template from ManualFig — generate the step figures at manualfig.ai